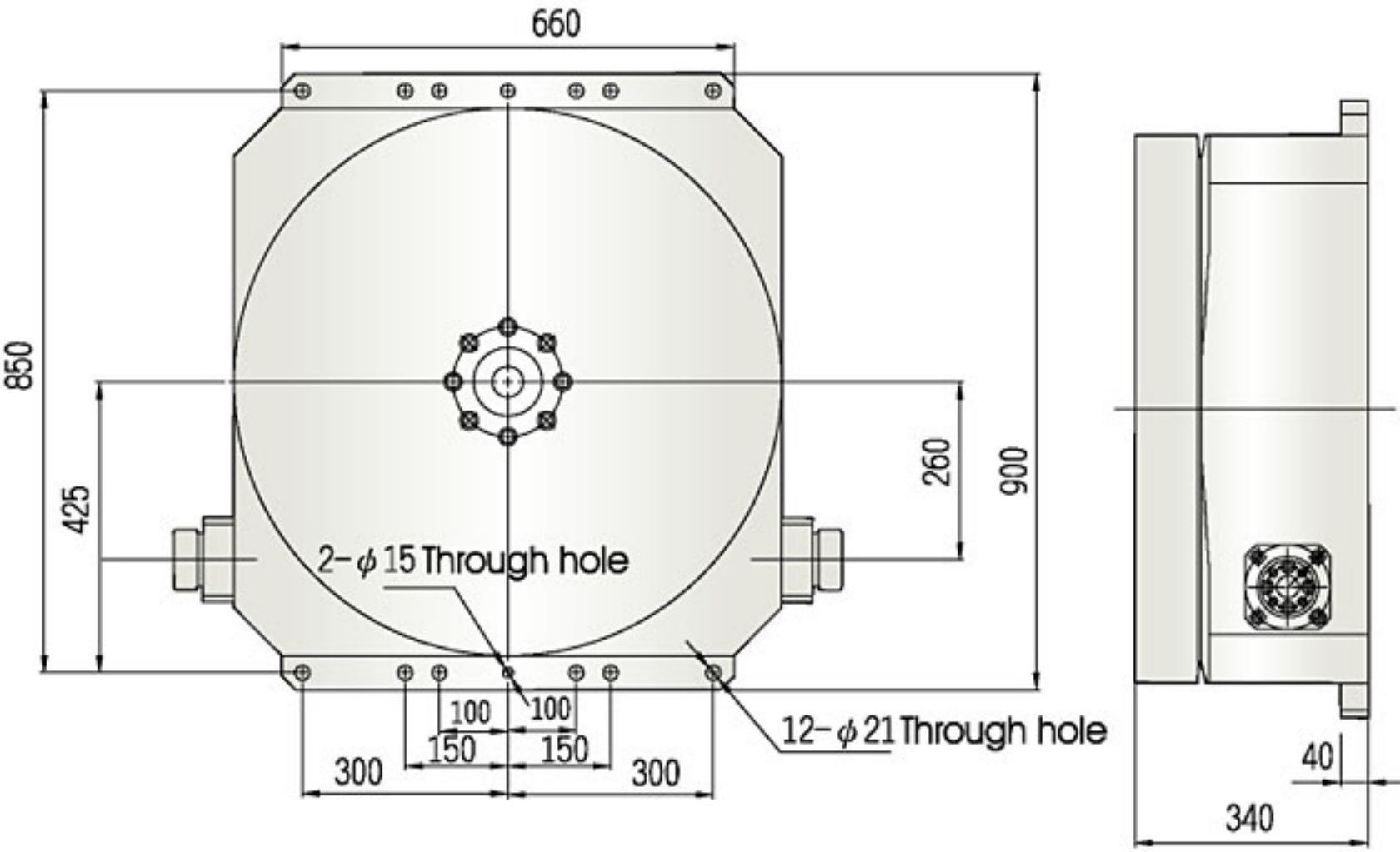
660
850
425
260
900
2-φ15 Through hole
12-φ21 Through hole
100
100
150
150
300
300
40
340

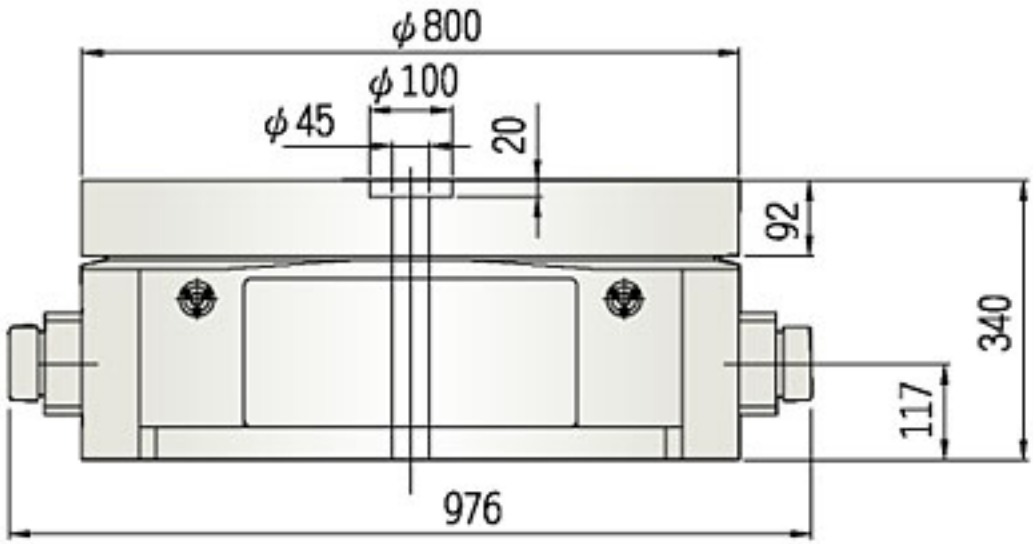
φ800
φ100
φ45
20
92
340
117
976